FRC Procedure 2015_004

May 12

2015

Procedure for exchange Ball screws(X & Y Axes) in FRC –Alpha 0iD model machines. Please read the procedure thoroughly before starting the replacement activities.

Exchange of X & Y axes Ball screws

The exchange procedure manual of the ball screw for ROBOCUT α-iD.

In this manual, it explains the exchange procedure only of the X-axis of α-1iD, because the exchange procedure of the X-axis and the Y-axis or 0iD and 1iD is the same.

1.Turn the power off.

2.Remove the plate , the bearing and the bellows on the tip of the ball screw.

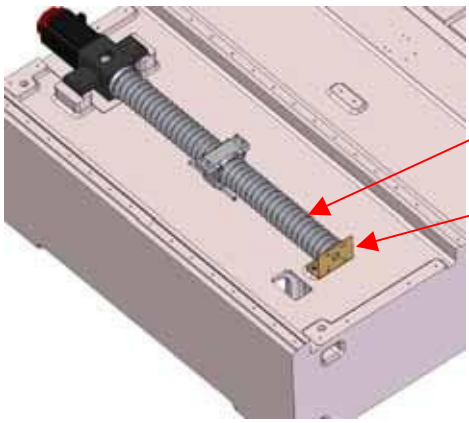

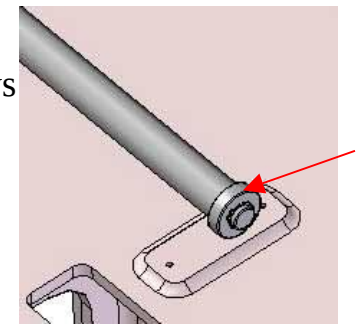

3.Peel off the bellows between motor and nut holder. *

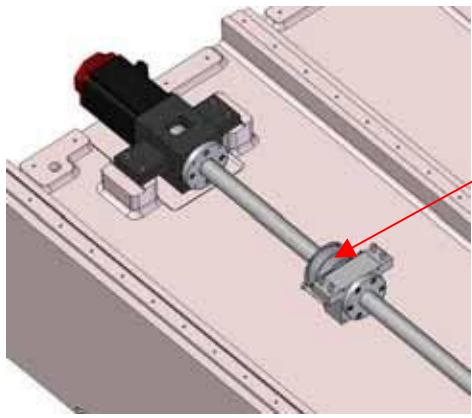

4.The motor and the ball screw are combined with the coupling.**
Loosen a bolt of the coupling from the hole in the upper part of the motor housing.

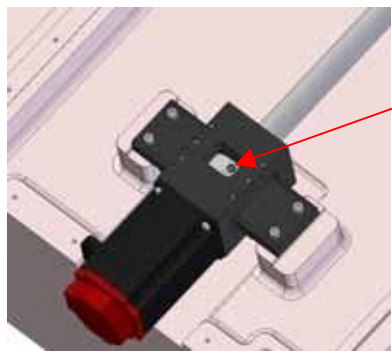

5.Remove M6 bolts which are fixing the bearing holder on the motor housing, and remove the bearing holder.

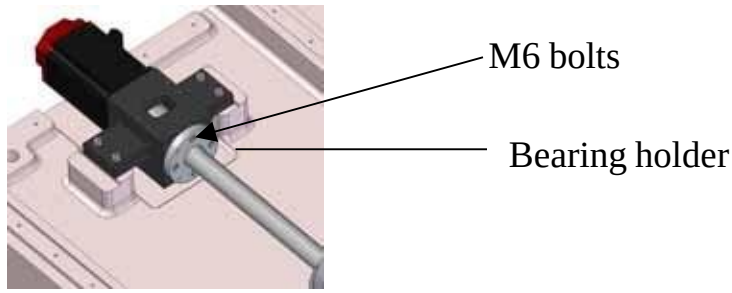

6.Pull the ball screw from the motor housing.

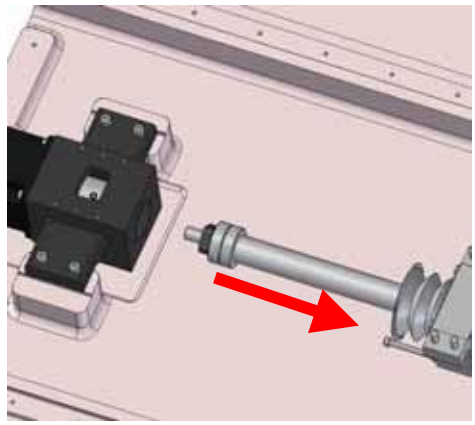

7.Remove the lock-nut,the bearings and the bearing holder from the ball screw.

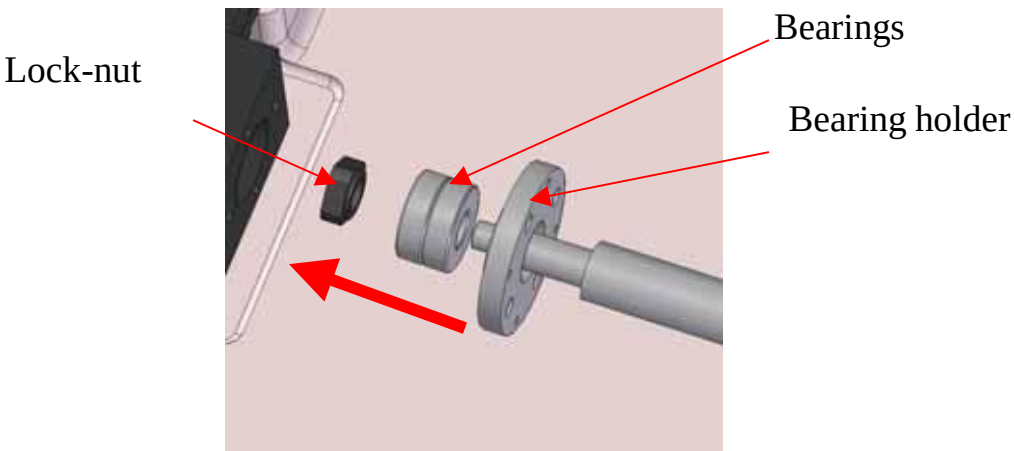

8.Remove the M5 bolts which are fixing a nut on the nut holder, and remove the ball screw from the nut holder.

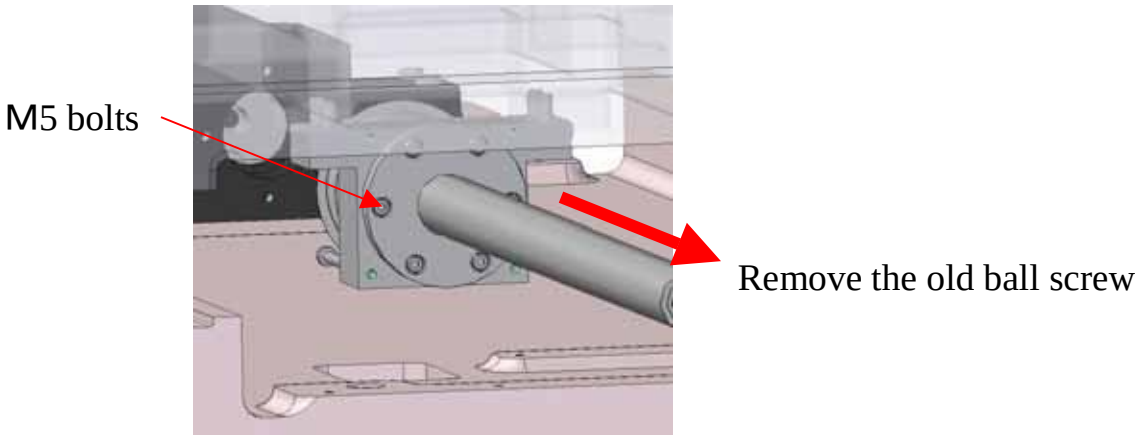

9.Insert the new ball screw into the nut holder, and fix the nut on the nut holder loosel with M5 bolts.

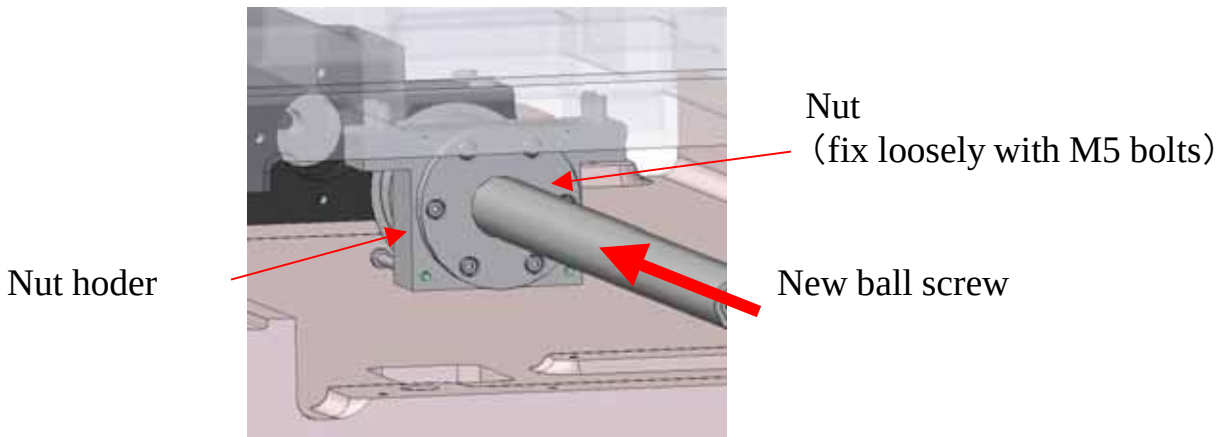

10.Installs the bearing holder and the bearing into the ball screw, and fix them with the lock-nut.

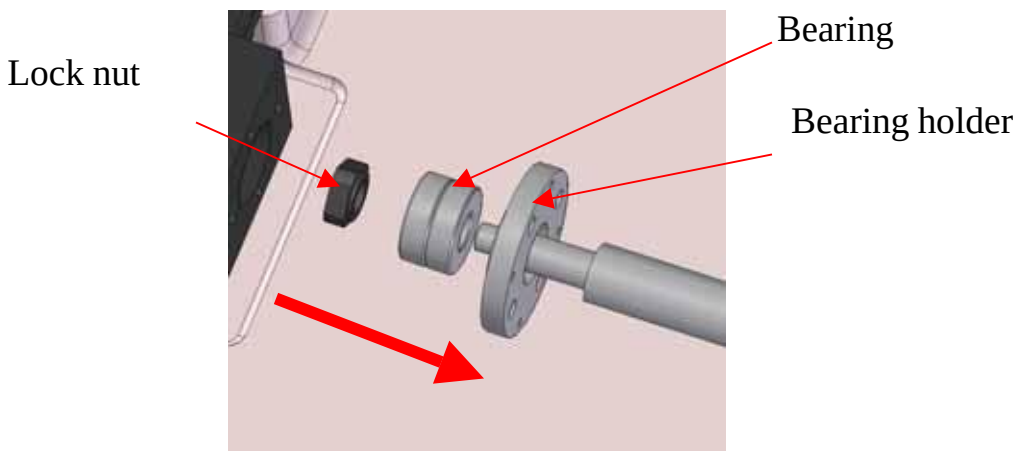

11.After tightened the lock-nut, install the spacer and set screw into the lock-nut.
（tightening torque of lock-nut：4700N・cm）

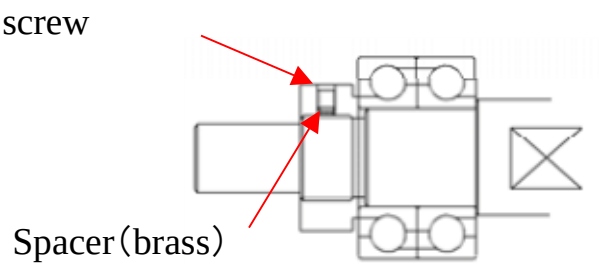

12.Fix the ball screw unit on the motor housing.**
When fixing the bearing holder on the motor housing,
be careful to fasten up the bolts gradually in order at the equal torque.

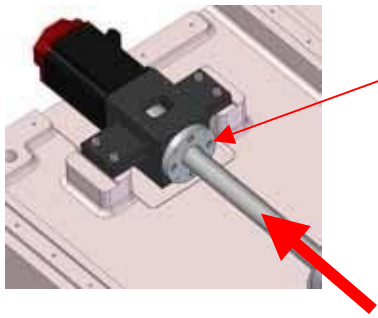

Fix at the equal torque.
Tightening torque of the bolts:130kgf-cm

13.Move the nut holder to the motor side as closely as possible.

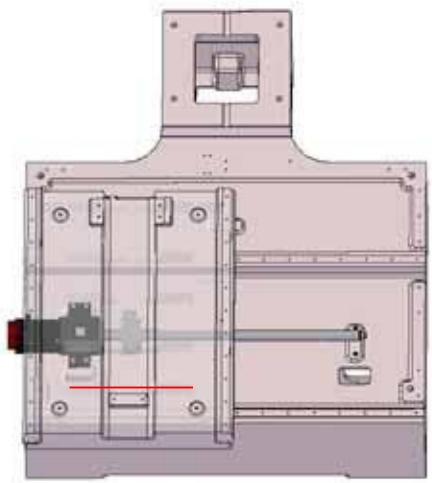

If there are jigs to adjust the alignment of the ball screw, please make the adjustment as follows.
If not, please proceed to No.14.

Adjust the straightness of the upper and side aspects of the ball screw within 5 μ m/200mm.

A : Adjust the straightness of the upper side within 5 μ m/200mm.

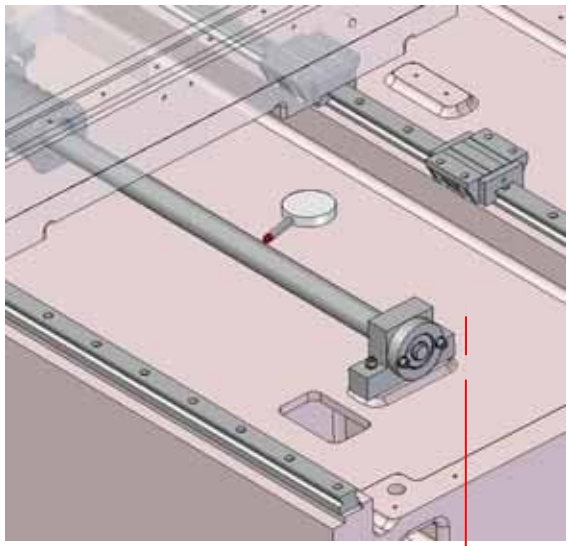

Adjust the straightness by moving this block up and down.

B : Adjust the straightness of the side aspect within 5 μ m/200mm.

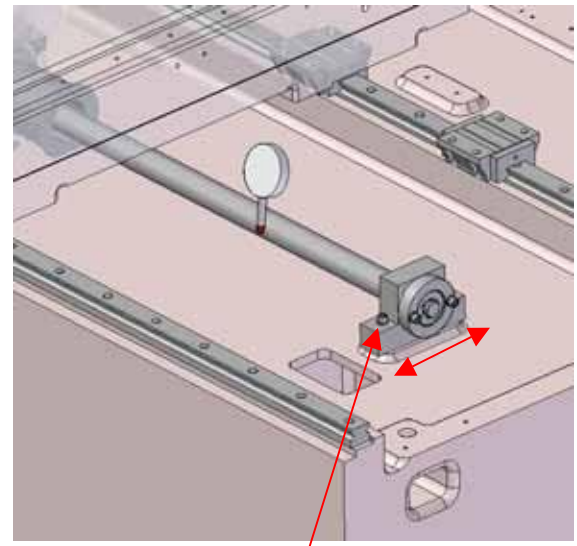

Adjust the straightness by moving this block right and left.

Repeat A and B at least 3 time to adjust the straightness.

14.Tighten up the M5 bolts fixing the nut on the nut holder. *

At this time, confirm that the nut holder is in the closest position to the motor. If not, the ball screw may be worn away early.

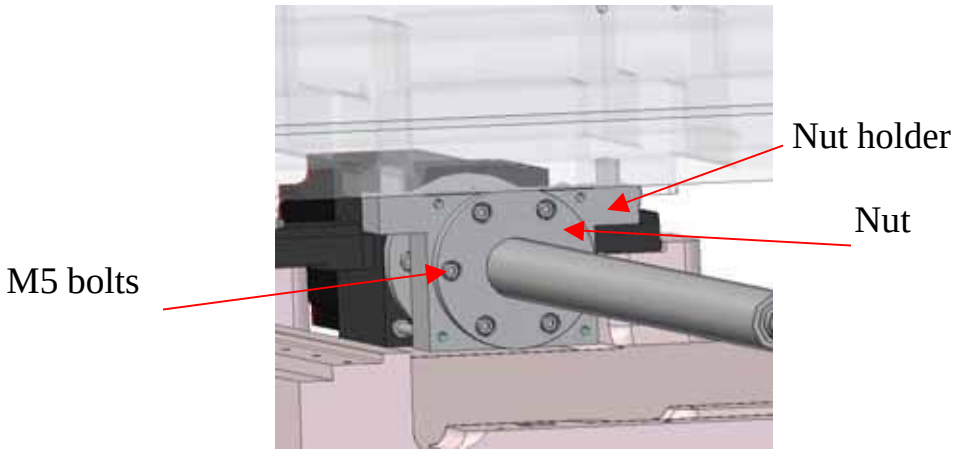

Move the nut holder to the motor side as closely as possible.

15.Tighten the screw of the coupling.

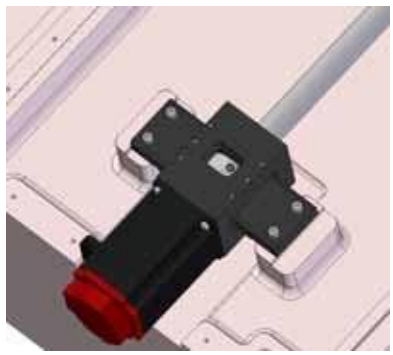

16. Fix the bearing and the bellows on the tip of the ball screw.

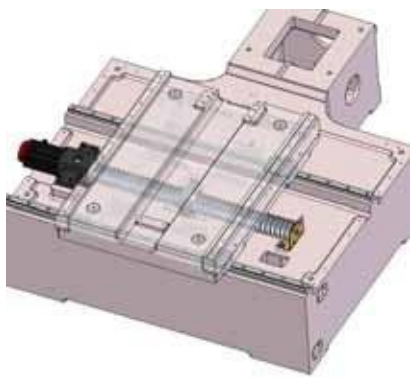

17.Turn the power on.
At this time, the machine origin point of the X-axis is not correct.
(without linear scale option)
So move the axis with great care.
Set the correct machine origin point.

18.After setting the correct machine origin point, move the X-axis to the X=600 position in the machine coordinate system, and adjust the gap between the bolts and the plate to 2mm,then fix the plate to the bed with M6 bolts.

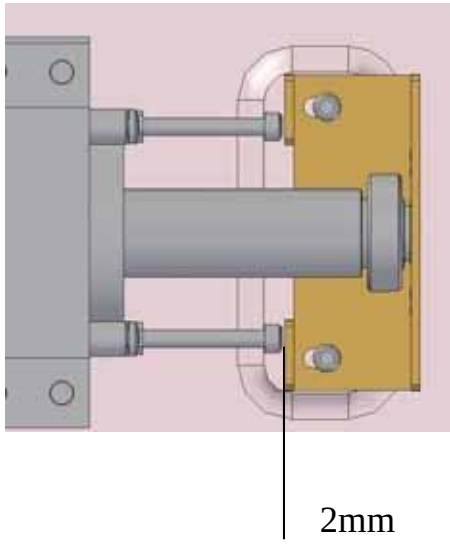

19. Operate the axis for approximately 10 minutes at full stroke.
After that, adjust the collision protection function.

To prevent the damage of the ball screw

Grease up the ball screw once in the 6 months.
The grease to apply is the Multemp LRL3 (KYDO YUSHI CO.,LTD.)

Lecture to the customer to move the table at full stroke once a day.

Specified grease

For linear guide and Z-axis screw: Showa Shell Sekiyu K.K., Alvania No. 2

For the X-, Y-, U-, and V-axis ball screws: KYODO YUSHI CO., LTD.,Multemp LRL No. 3

*** Note 1:**

✘ Do not remove the Nut holder from the table!

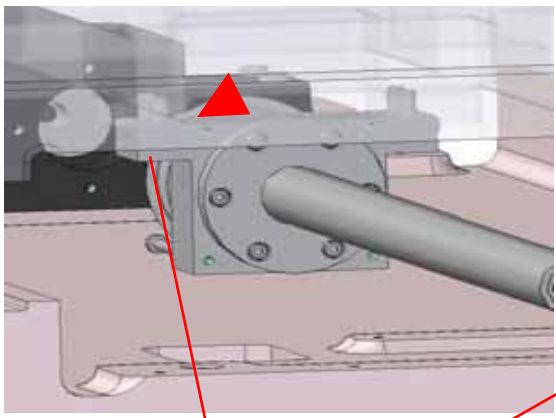

Nut Holder

**** Note 2:**

✘ Do not remove the Motor Housing!!

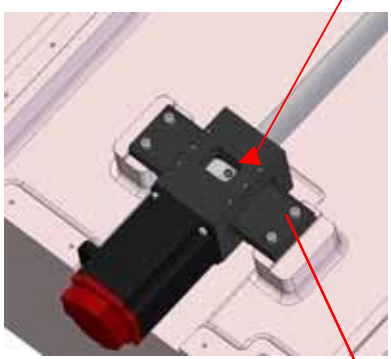

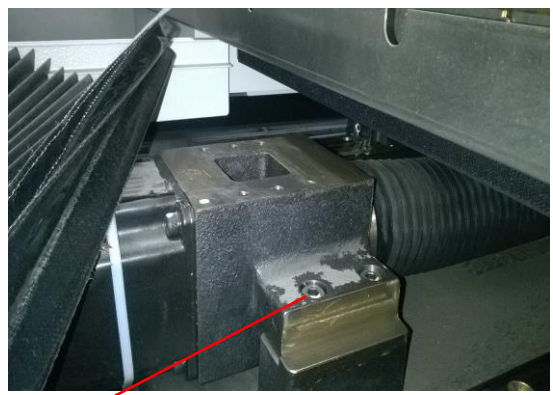

Motor Housing